Instruction:

Complete all questions in **1 hour.**

1. What is combinational circuit? Draw truth table of each of the following logic gates.
   a) OR Gate b) AND Gate c) NAND Gate d) NOR Gate e) XOR Gate
2. Derive truth table of each of the expressions.
   a) $\bar{A}B\bar{C} + A\bar{B}C + \bar{A}\bar{B}C$
   b) $\bar{A} + A\bar{B}\bar{C} + AB\bar{C}$
   c) $A\bar{C} + \bar{A}BC + \bar{A}\bar{B}\bar{C}$
3. Draw a circuit diagram corresponding to the following Boolean expression:
   a) Q = (A OR B) AND C
   b) O = (AB’ + c’)’ +D
   c) Z= (A+B’) (C+D)’
4. Use the laws and rules of Boolean algebra to simplify the following problems and draw the logic circuit of the simplified circuit.
   a) $\bar{P}\bar{Q} + \bar{P}\,Q$
   b) $\bar{P}Q + PQ + \bar{P}\bar{Q}$
   c) $\bar{F}\bar{G} + F\bar{G} + \bar{G}(F + \bar{F})$
   d) $\bar{A}.B.\bar{D} + B.C.D + \bar{A}.B.\bar{C}.D + C.D$
   e) $\bar{X}.\bar{Y}.\bar{Z} + X.Y.Z + \bar{X}.\bar{Y}.Z + \bar{X}.Y.Z$
   f) $\bar{X}.Y.Z + X.Y.Z + X.\bar{Y}.Z + X.Y.\bar{Z}.$
5. Draw the logic circuits and apply De-Morgan’s theorems to Simplify the expressions:

$\overline{X \bullet Y \bullet Z}$	$\overline{(A+B+C)D}$
$\overline{X+Y+Z}$	$\overline{ABC+DEF}$
$\overline{\bar{X}+\bar{Y}+\bar{Z}}$	$\overline{A\bar{B}+\bar{C}D+EF}$
$\overline{\bar{W} \bullet \bar{X} \bullet \bar{Y} \bullet \bar{Z}}$	$\overline{\overline{A+B\bar{C}}+D(\overline{E+\bar{F}})}$

6. Using Boolean algebra laws, prove that: $\overline{a + bc} = \bar{a}.\bar{b} + \bar{a}.\bar{c}$
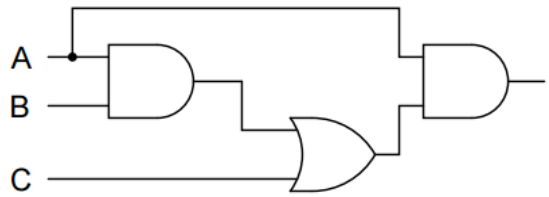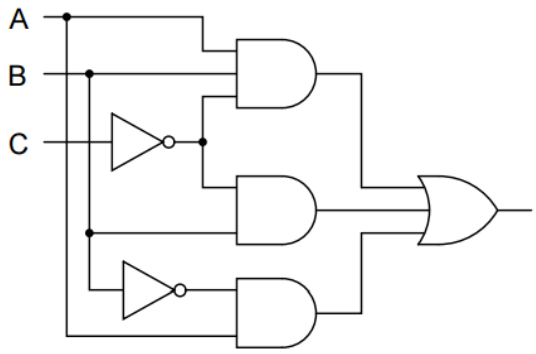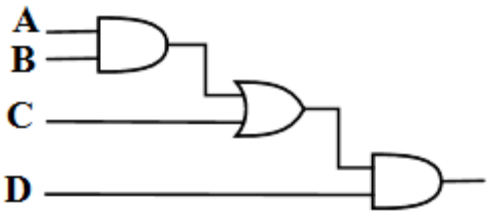
7. Using Boolean algebra laws, prove that: $\overline{a[b + z(x + \bar{a})]} = \bar{a} + \bar{b}(\bar{z} + \bar{x}.a)$
8. Simplify the expression $\overline{(\bar{A} + C).(B + \overline{\overline{D}})}$
9. Label the output of the following circuits.